TREATMENT PLANT APPROVAL 04/2026

Plumbing and Drainage Regulation 2019, part 4.

Approval

1. The **FujiClean ACE 3000** onsite sewage treatment plant ("the system") described in the Specifications and Drawings in the attached Schedule, manufactured and supplied by **FujiClean Australia Pty Ltd** (ABN 74 129 181 317) ("the manufacturer"), has been assessed in accordance with:
   (a) section 19 of the *Plumbing and Drainage Regulation 2019*
   (b) the Queensland Plumbing and Wastewater Code published on 26 June 2025.
2. A Treatment Plant Approval (TPA) is granted for an **Advanced secondary** quality wastewater treatment system subject to compliance by the manufacturer with the requirements of the *Plumbing and Drainage Act 2018* and the conditions of approval detailed below.
3. This approval, the conditions of approval, and the Schedule comprise the entire TPA document.
4. Any modification by the manufacturer/supplier to the design, drawings or specifications scheduled to this approval must be approved by the Chief Executive.

Conditions of approval

5. The manufacture, installation, operation, service, and maintenance of the system must conform with the conditions of this TPA.
6. The system, when tested against AS 1546.3:2017 and assessed by a certification accreditation body, was found to comply with the **Advanced secondary** quality, 3000 L/day level. The system must continue to meet the following effluent criteria:

Table 2.1 (Abrev) AS1546.3:2017 Advanced secondary effluent compliance criteria for an STS

Parameter	Advanced secondary effluent	
	90% of Samples	**Maximum**
BOD_5	≤ 10 mg/L	20 mg/L
TSS	≤ 10 mg/L	20 mg/L
*E. coli**	≤ 10 cfu/100 mL	30 cfu/100 mL
FAC[Þ]	Minimum 0.5 mg/L[†]	N/A
Turbidity[§]	N/A	10 NTU

* Where disinfection is required
Þ Where chlorine disinfection is required
† Minimum level, not 90% of samples
§ Where UV light is used for disinfection

7. Each system installed must be serviced in accordance with the Certificate of Conformance, certificate number **8221-3568-01** issued by Global Certification Pty Ltd on 30 January 2026, and details supplied in the owner's operation and maintenance manual.
8. Each system must be supplied with —
   a. a copy of this TPA document
   b. details of the system
   c. instructions for authorised persons for its installation
   d. a copy of the owner's manual to be given to the owner at the time of installation
   e. detailed instructions for authorised service personnel for its operation and maintenance.

Treatment Plant Approval
Approved by: Steve Storer
Delegated Authority
Department of Housing & Public Works

9. At each anniversary of the TPA issue date, the manufacturer/supplier must submit to the Chief Executive, a list of all systems installed in Queensland during the previous 12 months. Where the Chief Executive is notified of any system failures, the Chief Executive may randomly select several installed systems for audit. The Chief Executive will notify the supplier's nominated NATA accredited laboratory which systems are to be audited for BOD_5 and TSS. The sampling and testing of the selected systems are to be done at the supplier's expense.

   The following results must be reported to the Chief Executive:
   a. Address of premises
   b. Date inspected and sampled
   c. Sample identification number
   d. BOD_5 for influent and effluent
   e. TSS for influent and effluent.

10. The Chief Executive may, by written notice, cancel this TPA if the manufacturer/supplier fails:
    a. to comply with one or more of the conditions of approval, or
    b. within 30 days, to remedy a breach for which a written notice been given by the Chief Executive.

11. This approval may only be assigned with the prior written consent of the Chief Executive.

12. This approval expires on **04 November 2031** unless cancelled earlier in accordance with paragraph 10 above.

Steve Storer

Treatment Plant Approval
Approved by: Steve Storer
Delegated Authority
Department of Housing & Public Works

Level 15,
53 Albert Street Brisbane
GPO Box 2457, Brisbane Qld 4001
Website www.hpw.qld.gov.au
ABN 61 331 950 314

A/Director
Building Policy

05 November 2026

Treatment Plant Approval
Approved by: Steve Storer
Delegated Authority
Department of Housing & Public Works

TREATMENT PLANT APPROVAL 04/2026
Plumbing and Drainage Regulation 2019, part 4.

SCHEDULE

FujiClean Australia ACE 3000

Attachment 1 – Global Certification Certificate 8221-3568-01
Attachment 2 – FujiClean Australia ACE 3000 – Owner's manual
Attachment 3 – FujiClean Australia ACE 3000 – Engineering schematics and electrical diagrams

Treatment Plant Approval
Approved by: Steve Storer
Delegated Authority
Department of Housing & Public Works

Attachment 1 – Global Certification Certificate 8221-3568-01

PRODUCT CERTIFICATE OF REGISTRATION

FujiClean Australia Pty Ltd

2/176 Siganto Drive, Helensvale, QLD 4212, Australia

Product Performance Testing

1546.3:2017
Advanced Secondary 3000 L/day or 20EP level with a reduction of 61.25% for Nitrogen and 6.49% for Phosphorus

Model	Disinfection	Average Results over the Test Period	Servicing Frequency	Discharge	Manufactured and assembled
FujiClean ACE 3000	Yes	TSS: 4.98mg/l BOD5: 1.29mg/l E Coli: 0.20 CFU/100mL Nitrogen: 29.37mg/L Phosphorous: 10.66mg/L	3 Month Service 2.3 yearly sedimentation pump out or as required	Pumped via disinfection/pump chamber with chlorine dispenser	Manufactured and Assembled: 59 Computer Road, Yatala, QLD 4207, Australia Or 37 Wells Road, Mordialloc, VIC 3195, Australia
The system took 1 week to meet the advanced secondary standard. No additives apart from Chlorine for disinfection was added to the system during testing. The tanks are certified to AS/NZS 1546.1:2008					

This Certificate of Conformance to the Product Certificate Scheme for 'Domestic Wastewater Treatment Units (AWTS)' remains the property of Global Certification Pty. Ltd. and is granted subject to the terms and conditions of the Contract Application, in respect of the Product certified on this page and the attached schedule to the Certification of Conformance, bearing the same number as this certificate.

Evan Miller - General Manager
Compass Assurance Services Pty Ltd

JAS-ANZ

CERTIFICATION DATE:	DATE OF ISSUE:	EXPIRY DATE:	CERTIFICATE #:
14 February 2021	30 January 2026	14 February 2031	8221-3568-01

GLOBAL CERTIFICATION

Global Certification Pty Ltd
1C, 60 Enterprise Place, Tingalpa, QLD 4173, Australia
1300 495 855 | www.globalcertification.com.au

Global Certification Pty Ltd is accredited by The Joint Accreditation System of Australia and New Zealand (www.jas-anz.org/register) – accreditation number: 2448041DAC

Treatment Plant Approval
Approved by: Steve Storer
Delegated Authority
Department of Housing & Public Works

Attachment 2 – ACE 3000 – Owner's manual

FujiClean AU

COMMERCIAL WASTEWATER TREATMENT SYSTEM

FUJICLEAN ACE3000

Owner's Manual



Ver.13: 13 February 2026

Treatment Plant Approval
Approved by: Steve Storer
Delegated Authority
Department of Housing & Public Works

Dear Customer,

Thank you for choosing a FujiClean Wastewater Treatment System. Please read this owner's manual carefully before using FujiClean ACE9000 and keep for future reference.

The information contained in this manual is subject to change without notice. Please contact us via www.fujiclean.com.au for current updates.

TABLE OF CONTENTS

1 SAFETY PRECAUTIONS 1
2 OVERVIEW 2
3 TREATMENT PROCESS 3
4 MAINTAINING YOUR SYSTEM 4
5 OPERATION OF REMOTE ALARM PANEL 5
6 WARRANTY REPAIR & POLICY 6
WARRANTY 7

1 SAFETY PRECAUTIONS

Read the safety precautions carefully before operating the system.
The contents of this section are vital to ensure safety. Please pay special attention to the following signs.

⚠ **WARNING:** This symbol refers to a hazard or unsafe practice which can result in severe personal injury or death.

⚠ **CAUTION:** This symbol refers to a hazard or unsafe practice which can result in personal injury and/or the potential for product or property damage.

⚠ WARNING

Electrical safety
- Do not open the electrical box. There are no user serviceable parts inside. The system shall be maintained by a service agent approved by the local council.

Fall prevention
- Make sure the access covers are securely closed to prevent children from entering the tank.
- Report to the service agent if any cracks or damage is found on the access covers.

⚠ CAUTION

Preventing overload on the tank
- No vehicle shall approach within installed area of FujiClean system. Always maintain the system installed area free of all vehicle traffic. Parking a vehicle nearby the system may cause significant damage to the system.

Prevention of public health risk
- Do not use treated water for human consumption, livestock watering or irrigating edible crops.

Access Cover Lids
- Make sure there is no vehicular traffic loads applied on the access cover lids during the installation and operations. Unless there is any reason, please refrain from standing on the access cover lids.

1

Treatment Plant Approval
Approved by: Steve Storer
Delegated Authority
Department of Housing & Public Works

2 OVERVIEW

What is an AWTS?

An Aerated Wastewater Treatment System (AWTS) is a small-scale onsite sewage treatment plant. An AWTS uses the processes of aeration followed by clarification to achieve biological treatment of wastewater.

FujiClean ACE3000 is an AWTS designed to comply with the Australian Standard 1546.1 and 1546.3 (2017) and to meet each state and territory in Australia's regulatory requirements.

FujiClean ACE3000 Treatment System



FujiClean ACE3000 is designed to treat the commercial wastewater from the kitchen, bathroom, toilet, and laundry area and is capable of producing **Advanced Secondary Quality Effluent** as specified below. The daily design flow rate of FujiClean ACE3000 is 3,000 L/day.

- BOD equal to or less than 10mg/L
- Suspended Solids equal to or less than 10mg/L
- Thermotolerant coliform less than 10cfu/100mL

Final effluent quality will be determined by a number of factors. Your installer and your service agent will offer advice, and monitor the system at service, and report to you accordingly.

What is BOD?
Biochemical Oxygen Demand (BOD) is a standard measure of water quality. It is a measure of the amount of oxygen (mg/L) consumed by natural, biological processes, like bacteria, which break down organic matter. A higher BOD indicates poor quality of water.

2

Treatment Plant Approval
Approved by: Steve Storer
Delegated Authority
Department of Housing & Public Works

3 TREATMENT PROCESS

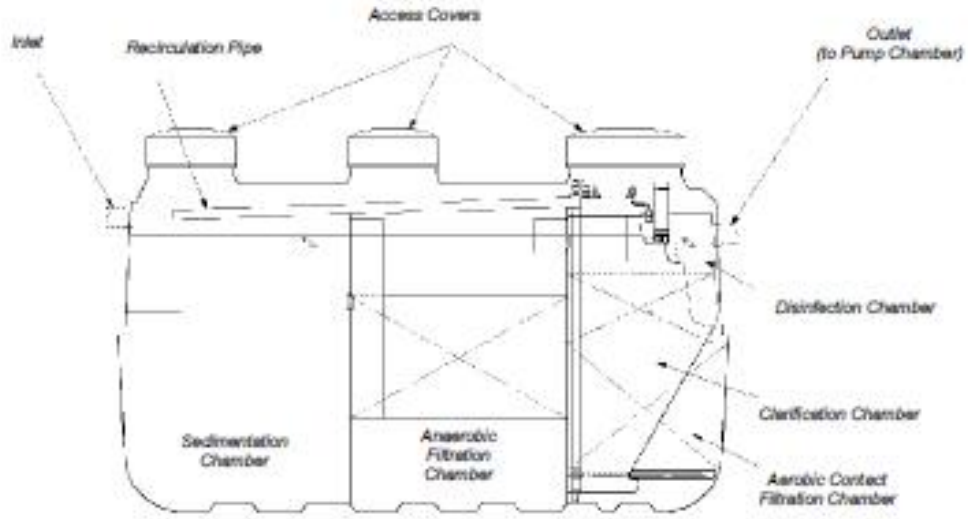

Sedimentation Chamber

This chamber is designed to physically separate the solids from the incoming water.

Anaerobic Filtration Chamber

This chamber contains a spherical skeleton media. Through bacterial growth processes on the surface of the filter media, biological anaerobic treatment thrives while suspended solids are captured. Furthermore, the bacteria in this chamber convert nitrates in the recirculated water returning from the aerobic chamber to gaseous nitrogen. The nitrogen then escapes to the atmosphere.

Aerobic Contact Filtration Chamber

The aeration chamber consists of upper section with net-block media and lower section with net-hollow-cylindrical media. Organic matters are decomposed by micro-organism/bacteria on the media surface while suspended solids are captured in media. Furthermore, suspended solids accumulated on the bottom are constantly transferring to the sedimentation chamber by a recirculation air-lift pump.

Clarification Chamber

This chamber is designed to temporarily store treated water flowing from the aeration chamber. In this chamber, the suspended solids settle to the bottom and are returned to the sedimentation chamber.

Disinfection Chamber

The treated water from the clarification chamber passes through the chlorinator for final disinfection. This is the final process of treatment.

Pump Chamber (Separate, and supplied by others)

This treated water is ready for discharge to the disperal area.

3

Treatment Plant Approval
Approved by: Steve Storer
Delegated Authority
Department of Housing & Public Works

4 MAINTAINING YOUR SYSTEM

Owner's Responsibilities

The owner is responsible for:

- Ensuring the system is always operating efficiently.
- Promptly fixing the system when a problem is detected.
- Ensuring the system is inspected and serviced quarterly by a qualified service technician.
- Ensuring the system is desludged when it is required.

To ensure the overall health and performance of your FujiClean wastewater treatment system, FujiClean Australia recommends a desludge of the system every 3 years, or earlier if the maximum accumulated sludge and scum levels are reached as specified by the manufacturer. The desludge frequency will depend on sludge and scum accumulation levels, which varies depending on usage. Your FujiClean service agent will measure the sludge depth at every service interval and will advise you when desludging is required.

⚠ **CAUTION:** Any problems caused due to the neglect of the quarterly service being carried out or disregarding desludging advice from your FujiClean service agent will immediately void warranty.

Tips for Trouble-Free Operation

Below is a guide on good maintenance procedures, which you should follow:

- Keep your water usage well below the system's daily design flow rate.
- Do not switch off the power to the system even if you are going on holidays. If extended periods of non-use are anticipated, contact your service agent.
- Do not use more than the recommended amounts of detergents.
- Do not put fats and oils down the drain and keep food waste out of your system.
- Do not put bleaches, disinfectants, whiteners, nappy soakers, spot removers in large quantities into your system via the sink, washing machine or toilet.
- Do not allow foreign objects such as sanitary napkins, nappies, baby wipes, and other hygiene products to enter the system.
- Do not dispose of chemicals down the drain. The list below shows examples of chemicals which are considered harmful to the system.
  - Medicines
  - Paint, Paint Thinners and Paint Strippers
  - Solvents
  - Pesticides and Herbicides
  - Motor Oil, Petrol, Antifreeze, Break Fluid and Other Automotive Fluids

Regular Maintenance

The effective operation of the system is dependent on regular maintenance. It is to be serviced **EVERY 3 MONTHS** by a FujiClean authorised service agent.

Regular maintenance includes periodic removal of excessive sludge and scum build-up from the system. The frequency of removal depends on the system's loading.

Consumable parts for the blower such as air filter and diaphragms need to be replaced regularly. The recommended replacement interval for these parts is between 12 months to 24 months.

Irrigation Area/Disposal

There are certain requirements and laws for the irrigation system for the disposal/reuse of the treated wastewater. The irrigation system must be designed and installed by qualified professionals by law, and in accordance with the requirements of your local, state and/or Australian standards.

4

Treatment Plant Approval
Approved by: Steve Storer
Delegated Authority
Department of Housing & Public Works

5 OPERATION OF REMOTE ALARM PANEL

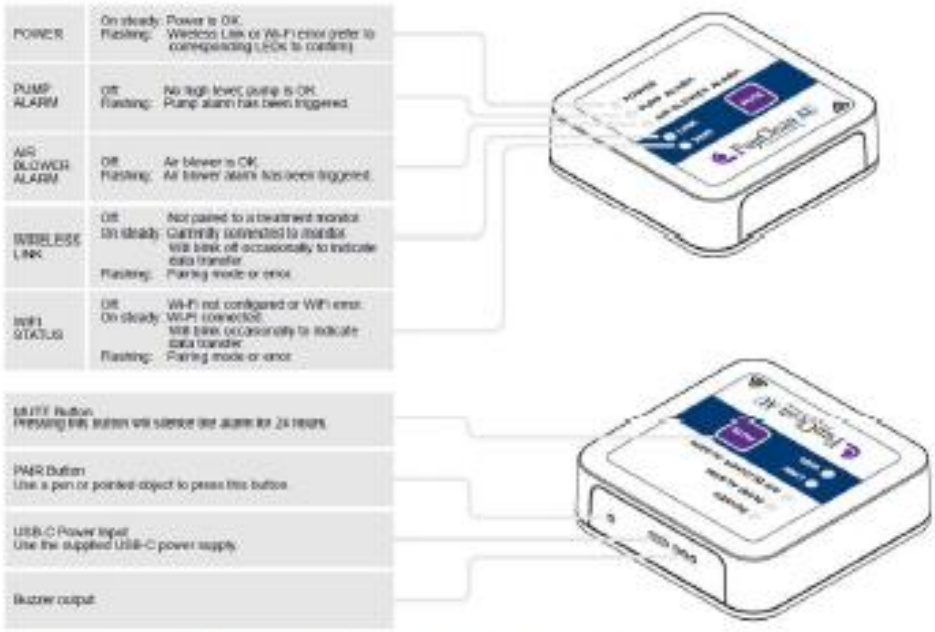

Please keep the alarm device always powered on using the supplied power cord.





Make sure that the Wireless Link indicator is on. If it is not steadily on, the pairing with the Fuji Tank may not be complete. In that case, please contact your installer or maintenance provider to complete the pairing process.

In the event that an alarm is triggered, please promptly notify your contracted maintenance provider.

Treatment Plant Approval
Approved by: Steve Storer
Delegated Authority
Department of Housing & Public Works

6 WARRANTY & REPAIR POLICY

Warranty Period

- Structural tank: 15 years from the date of commissioning
- Riser, Blower Box, Access Cover Lids: 2 years from the date of commissioning
- Electrical components: 2 years from the date of commissioning

Scope of Warranty

FujiClean Australia would repair defects of a FujiClean wastewater treatment system for free of charge when it was confirmed that the system was installed by a licensed plumbing contractor and serviced quarterly by an approved FujiClean service agent AND the defects in structure and function was caused by responsibility of manufacture within the above warranty period.

However, the repair would NOT be covered by FujiClean Australia when:

- consumable parts (i.e. disinfectant, diaphragm assembly, air filter) failed.
- there is no service agreement in place between customer and service agent.
- the system was not properly installed as per the installation instructions.
- the electrical components were not properly wired or mounted as per the Wiring Instruction.
- the system has broken down or was damaged as a result of retrofitting, improper repair, or any other changes outside the instruction manual.
- the damage occurred a result of moving the electrical parts (i.e. air blower).
- the damage occurred by heavy loads or vibration of any vehicle.
- the damage resulted from natural disasters such as flood, fire, earthquake or lightning, problems with electrical power such as power surges or incorrect voltages.
- the damage resulted from any other accident, inappropriate handling, machine or building foundation, foreign objects or chemicals.
- any trouble caused by excessive amount of inflow and foreign substances as described in "FujiClean ACE3000 Treatment System" on page 2.

Contacts

FujiClean Australia Pty Ltd.
PO BOX 1230 Oxenford QLD 4210
Ph: 1300 733 619
Website: www.fujiclean.com.au
Email: info@fujiclean.com.au

6

Treatment Plant Approval
Approved by: Steve Storer
Delegated Authority
Department of Housing & Public Works

WARRANTY

The rights expressed in this warranty are in addition to other consumer rights and remedies under a law in relation to the goods or services to which the warranty relates.

Our goods come with guarantees that cannot be excluded under the Australian Consumer Law. You are entitled to a replacement or refund for a major failure and for compensation for any other reasonably foreseeable loss or damage. You are also entitled to have the goods repaired or replaced if the goods fail to be of acceptable quality and the failure does not amount to a major failure.

The FujiClean product is warranted by FujiClean Australia Pty. Ltd. against defects in material and workmanship, under normal use and service, for the following warranty periods from the date of commissioning.

Structural Tank:	15 years	Electrical Components:	2 years
Access Cover Lids, Risers, Blower Box:	2 years	Other components:	2 years

Within the warranty period, any component forming part of the FujiClean Product which is determined by FujiClean Australia to be defective will be repaired or replaced by an authorised FujiClean service agent.

This warranty only applies if the product has been installed in accordance with the manufacturer's installation guidelines and serviced by a FujiClean Australia's authorised agent. The warranty does not cover damage resulting from use of accident, incorrect installation, misuse, neglect of periodical service and desludge, blockages, abuse, heavy loads such as any vehicle, machine or building foundation, foreign objects, root intrusion, chemicals, natural disasters such as flood, fire, earthquake or lightening, problems with electrical power such as power surges or incorrect voltages, repairs by unauthorised persons or exposure to abrasive or corrosive substances. This warranty does not apply to and shall not warrant any material or product that has been repaired or modified without prior approval from the manufacturer. This warranty does not cover consumable items unless the fault, defect existed at the time of purchase. Labour and travel related time and expense to replace any faulty parts including call out fee is not covered by the warranty.

Please fill out the following details completely and store in a safe place. To claim under this warranty, owner should contact FujiClean authorised service agent or FujiClean Australia Pty. Ltd.

Owner Details

Name: .....

Address: .....

.....Postcode: .....

Phone: ..... Email: .....

Product Model Number: FujiClean ACE3000

Serial Number: ..... Date of Commissioning: ..../..../.....

Installer Details

Company: .....

Address: .....

.....Postcode: .....

Phone: ..... Email: .....

7

Treatment Plant Approval
Approved by: Steve Storer
Delegated Authority
Department of Housing & Public Works

TREATMENT PLANT APPROVAL 04/2026
Plumbing and Drainage Regulation 2019, part 4.

Queensland Government

Attachment 3 – ACE 3000 – Engineering schematics and electrical diagrams

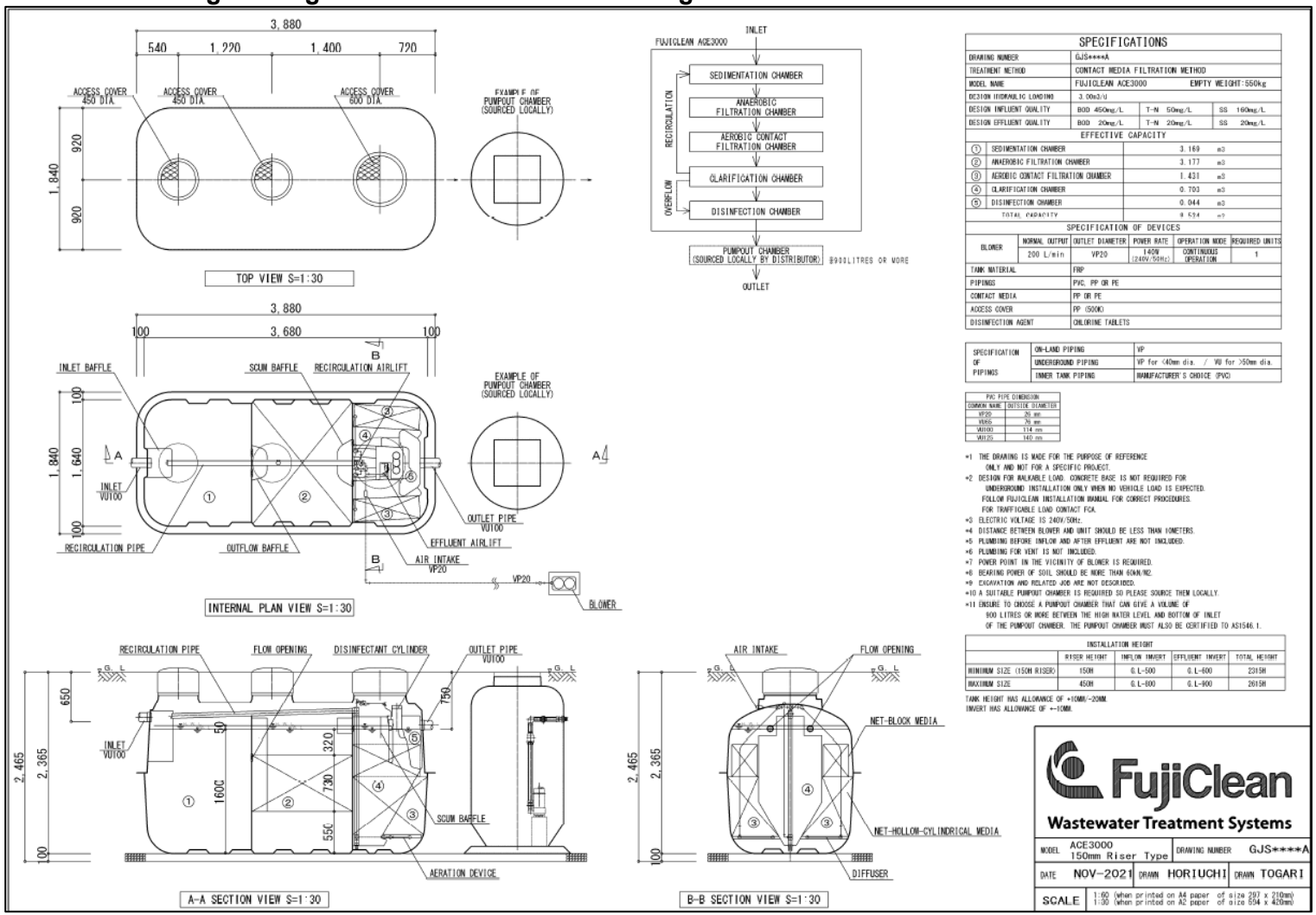

·Treatment Plant Approval
Approved by: **Steve Storer**
Delegated Authority
Department of Housing & Public Works

WIRING INSTRUCTIONS FOR ELECTRICIAN (BASIC)

All electrical power connections to the system must be carried out by a licensed electrician.
The power supply to the FujiClean ACE is single phase service and requires a dedicated circuit protected by a 10A RCD.

Connect remote alarm plate to the Treatment Monitor Unit with two wire cable. Since the two wire alarm cable is enclosed in the same conduit as the mains supply to this unit back to the house, the cable must be rated for 240V to comply with the Australian Standard.

Remote Alarm Plate must be positioned inside the dwelling in an area that is readily visible as per the Australian Standard.
If this is not possible an LED strobe light must be placed on blower box which is readily visible from inside the dwelling.

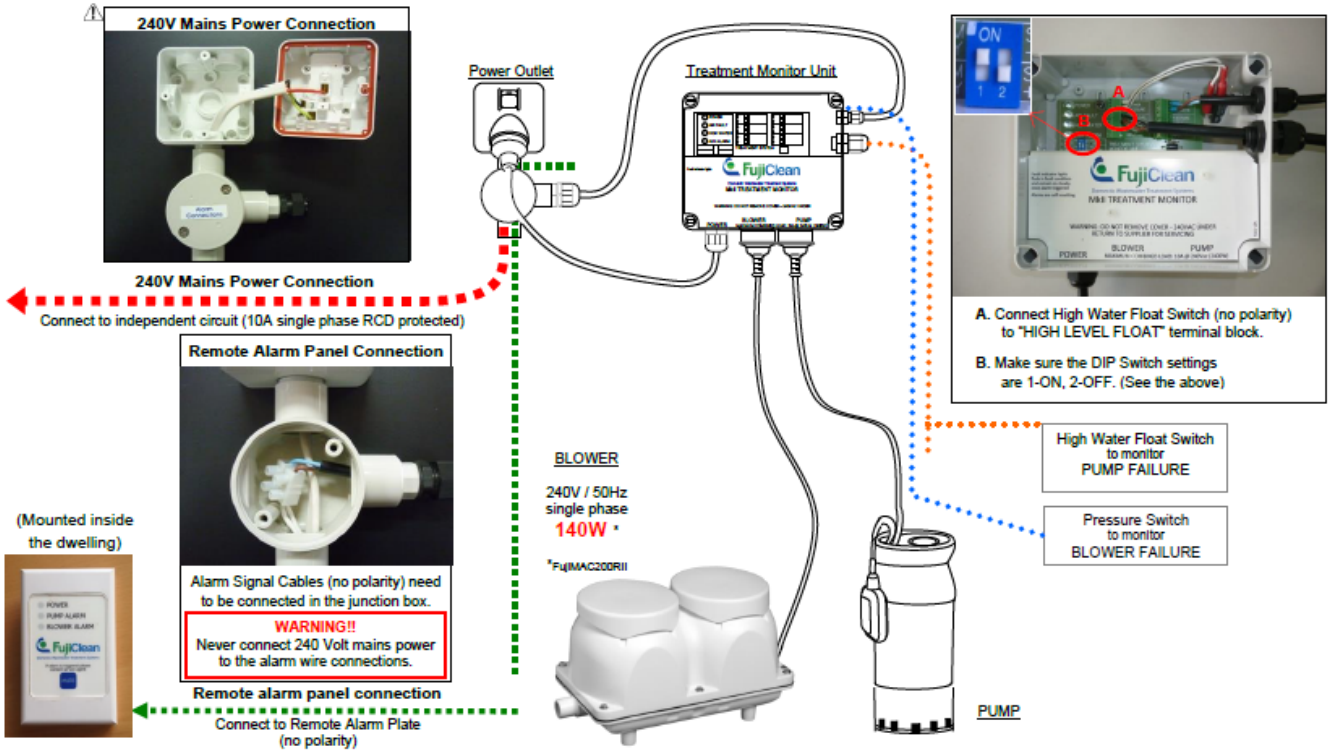

Treatment Plant Approval
Approved by: Steve Storer
Delegated Authority
Department of Housing & Public Works
Queensland Government